Raising Efficiency.

How RS Industria could help make significant savings for industries utilising Fire Tube Boilers.

USE CASE

Introduction.

Fire Tube Steam Boilers are the most common technique for the production of saturated steam, high pressure hot water or superheated steam in industrial settings. Steam is generated by heating water in a pressurised drum by means of hot gases, which are produced from the combustion of liquid or gaseous fuels circulating through submerged tubes.

The large volume of pressurised stored water is used to resolve the standard potential variables that affect all boiler type systems, including variations in the feed water, fuel, combustion quality, temperatures and, importantly, steam load variation.

What we monitor.

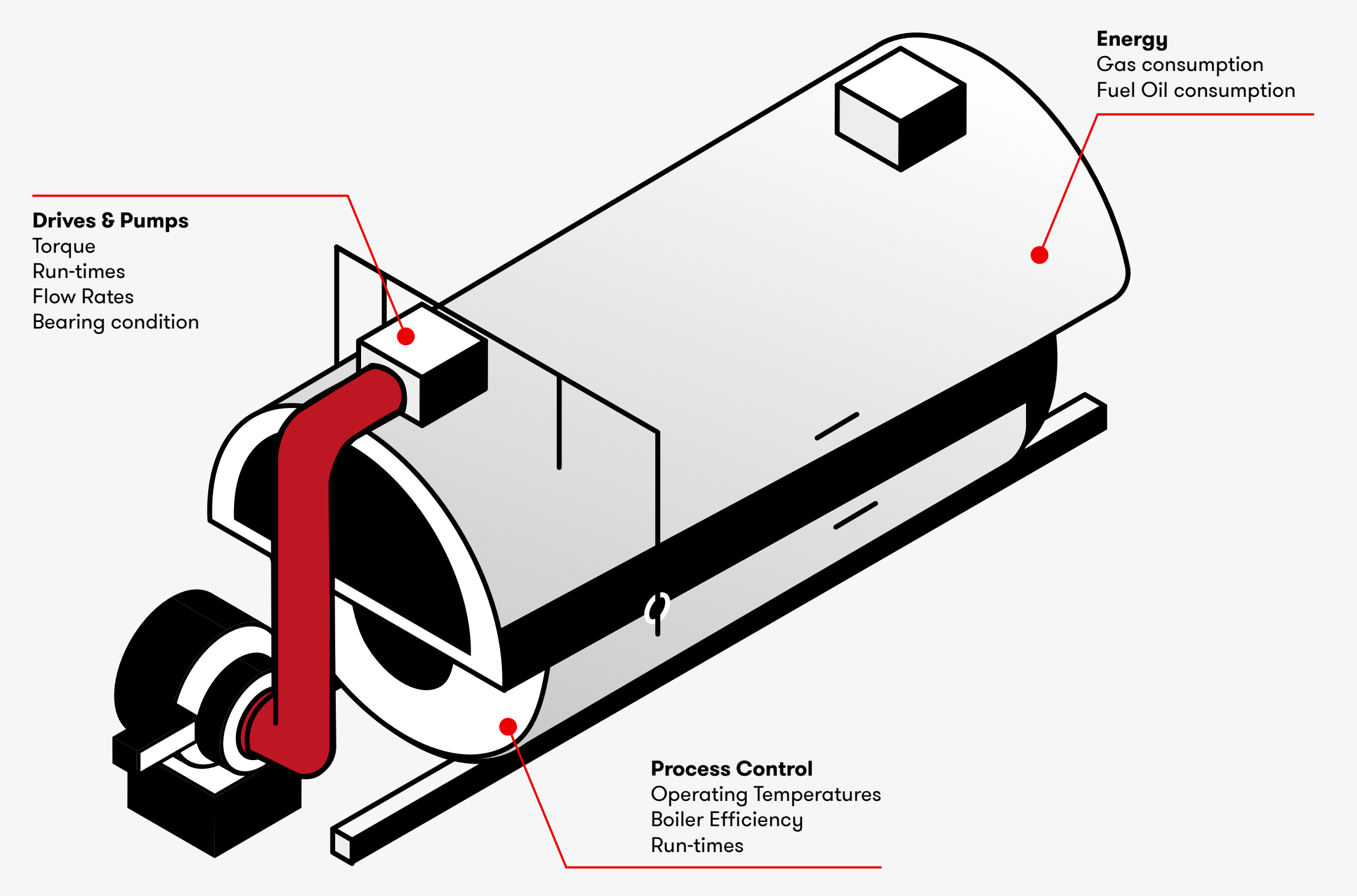

The Challenges.

Energy

A fire tube boiler can consume its own capital cost in fuel burnt every year and so ensuring the boiler is operating at peak efficiency is key to ensuring cost effective operation, yet many older boilers lack the telemetry to do this in real time. Even where the efficiency is measured, this data is often presented on local HMIs, with the data difficult to access and correlate with other data sets. In addition, the parasitic electrical load from the combustion air fan and boiler-water feed pump can also be high and is often not measured or, if it is, it is measured poorly.

Operations

Whilst boilers are typically unmanned, where multiple boilers are installed it is key to understand how much time the individual boilers are spending in full-fire, partial-fire or hot standby. This is particularly important where the available boilers have a range of different efficiencies: you want to know your most efficient boilers are carrying the majority of the load.

Maintenance

Whilst generally highly reliable assets, hence the reason they are in such common usage, fire tube boilers do suffer from a number of potential drawbacks that can severely impact their operational efficiency:

- Reduced thermal conversion efficiency due to poor setup
- Corrosion or scaling due to inappropriate water chemistry treatment
- Failure or degradation of ancillary devices such as feedwater pumps and air blowers
- Blocked steam traps

Our Solutions.

Energy

Monitoring of electrical energy from the ancillary assets (pumps and fans) can be easily achieved through CT clamps for older motors or direct from the inverter drive for more modern installations.

Calculating the efficiency of the boiler itself is critical to ensuring low energy conversion losses. Fuel and steam meters are usually present, and the data can be extracted, but these are often not connected to any network and frequently rely on manual reading and recording. Where such meters are not fitted, ethernet-enabled meters can be supplied.

The accuracy of the efficiency calculation can be improved through understanding condensate and blowdown losses. Efficiency of the steam traps can be estimated by monitoring the return of condensate back into the hot well through suitable meters, as can energy lost to blowdown.

Operations

Operational data can be inferred from the fuel and steam meters, giving a good indication of running hours and percentage load.

Maintenance

The ancillary plant can be simply monitored through tracking the electrical current consumption from either CT clamps or inverter drives. Where more granularity on the potential failure is required, which can increase the warning time to failure, we would look to use vibration and temperature sensors on the motors, pumps and fans.

This provides real-time data on the assets and picks up leading indicators of failure covering looseness, friction, mechanical impacts and overall asset health. Hardness and pH meters will allow monitoring of the water chemistry.

Your Benefits.

Typical Cost Savings

Better operating insight means better management of processes and their assets, resulting in lower operating costs. Here are some examples, based on our real-world experience in production environments:

Energy

A 10 tonne/hour boiler can easily consume in excess of £500,000 of gas per year at (May 2022 prices). A 5% improvement in energy efficiency will deliver a saving of £25,000 per annum.

Operations

Balancing load between boilers to ensure the most efficient unit is running at any point in time could deliver a further 5% reduction in energy consumption, or an additional saving of £25,000 per annum

Maintenance

A typical failure on the fans or feedwater pump could take 6-8 hours to repair and a further 4 hours to bring the steam back to temperature, leading to a total site shutdown of 12 hours - plus the consequential material write-off for any product in process.

Payback & ROI

These indicative calculations show that the system could potentially pay for itself, **on electricity & operational savings alone**, within just eight months.

110% ROI

Payback within 8 months

Year 1 Cost – £23,800

Annual Monitoring Cost – £1,800*

Set Up Costs	
	Hardware – £20,000
	Commissioning – £2,000

* This represents the boiler's share of the annual monitoring fee.

Savings – £98,000

Operational – £25,000

Energy – £25,000

Maintenance – £48,000

Modular Framework.

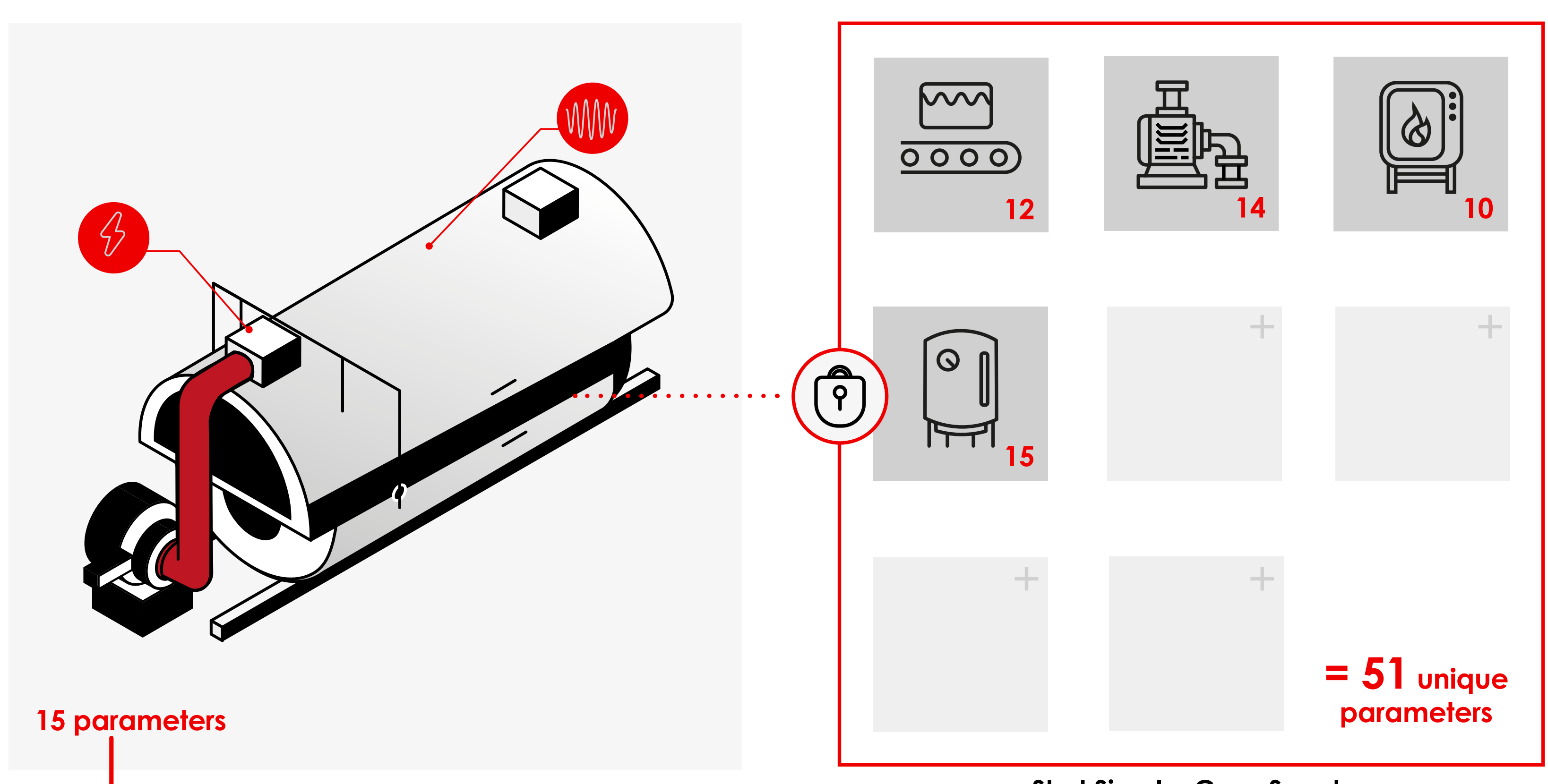

Start Simple, Grow Smart.

Modular and Secure

RS Industria is a modular system, providing an advanced, robust and cyber-secure framework into which any number of assets can be connected. This cloud-based system provides the following;

- **Asset Dashboards** – Designed for the specific asset type being monitored
- **Functional Dashboards** – Displaying Energy, Utilities, Compliance or Uptime for multiple assets, individual production lines or site-wide – all in one place.
- **Rules & Alerts** – Notifications and Warnings sent by SMS or email – or to the mobile app
- **Mobile App** – Real-time data display and alerts - Putting the data in the hands of those who need it, where they need it, when they need it.

Multi-Purpose Data.

Data Integration

As RS Industria integrates data from multiple sources, the system can re-purpose and combine data to extend the scope for asset insight.

	Data Options		
	Energy	Operations	Maintenance
Fuel Oil consumption	✓	✓	
Gas consumption	✓	✓	
Electric consumption	✓	✓	
Voltage	✓		✓
Current	✓	✓	✓
Torque	✓	✓	✓
Start/Stop		✓	
Fault/Operating Mode		✓	
Runtime		✓	
Temperature (Drive/Gearbox)		✓	
Oil Condition - sensor based			✓
Vibration-based			
Bearing Damage Indicator[1]			✓
Lubrication Warning Indicator[2]			✓
Waster Chemistry			
pH			✓
Hardness			✓
Primary Paramaters	6	4	5
Re-purposed Parameters	0	5	4

Data Integration

As RS Industria integrates data from multiple sources, the system can re-purpose and combine data to extend the scope for asset insight.

For example, monitoring electrical drive voltages and current enables the system to calculate torque.

All three of these of these variables can be used to not only better understand the energy usage of an electrical drive, but also its physical condition and whether it is operating outside its normal parameters.

High current and torque might indicate a bearing problem, a conveyor belt sticking or a batch of ingredients with the wrong viscosity.

1. **Bearing Damage Indicator** – Using frequencies from selected areas of the spectrum to rapidly identify when a bearing is being damaged, long before such damage is evident, or a failure occurs.
2. **Lubrication Failure Indicator** – this value uses specific frequencies to warn if a bearing is insufficiently lubricated, whether the lubricant is manually or automatically delivered.

These indicators can be further enhanced by using the operating data to provide context such as variable loading.

Multi-Purpose data offers significant benefits over the use of dedicated single-purpose monitoring systems:

- **Single point of integrated data** – enables comparison between different variables, potentially offering greater insight
- **Context-sensitive alerts** – take account of normal operational variances to avoid false alarms

Gain Asset Insight Now

Find out how we can help lower energy usage, enhance reliability and improve operational performance: in a way that is simple, fast and affordable.

1

Book Requirements Review

Review your requirements with one of our consultants. We'll help you prepare for the next step in the process, which is a detailed discussion with one of our solution design engineers. To book a Requirements Review, **click this link.**

2

Browse Our website

To find out more details including:
- Real-world case studies
- Use-cases like this one
- Product videos
...and more. Visit our website to see what is possible with RS Industria.

https://www.rs-industria.com

3

Contact Us directly

☎ +44 (0)333 2470235

✉ rs-industriasupport@rs-components.com

Start Simple Grow Smart ®

rs-industria.com