RS INDUSTRIA

Chilling the Breeze.

USE CASE

How RS Industria could help make significant savings for industries utilising Cooling Towers and Evaporative Condensers

Introduction.

Cooling towers and evaporative condensers are used to remove excess heat from a cooling system when the heat cannot be utilised for other purposes, with the excess heat removed by evaporating water.

Often "out of sight, out of mind" in remote areas of the site or on the roof, they are critical process assets where failures can have significant impact on energy consumption, site operations or control of L8. Whilst relatively simple, the fans and motors operate in a wet environment exposed to the weather, and traditional condition monitoring techniques are unsuitable.

What we monitor.

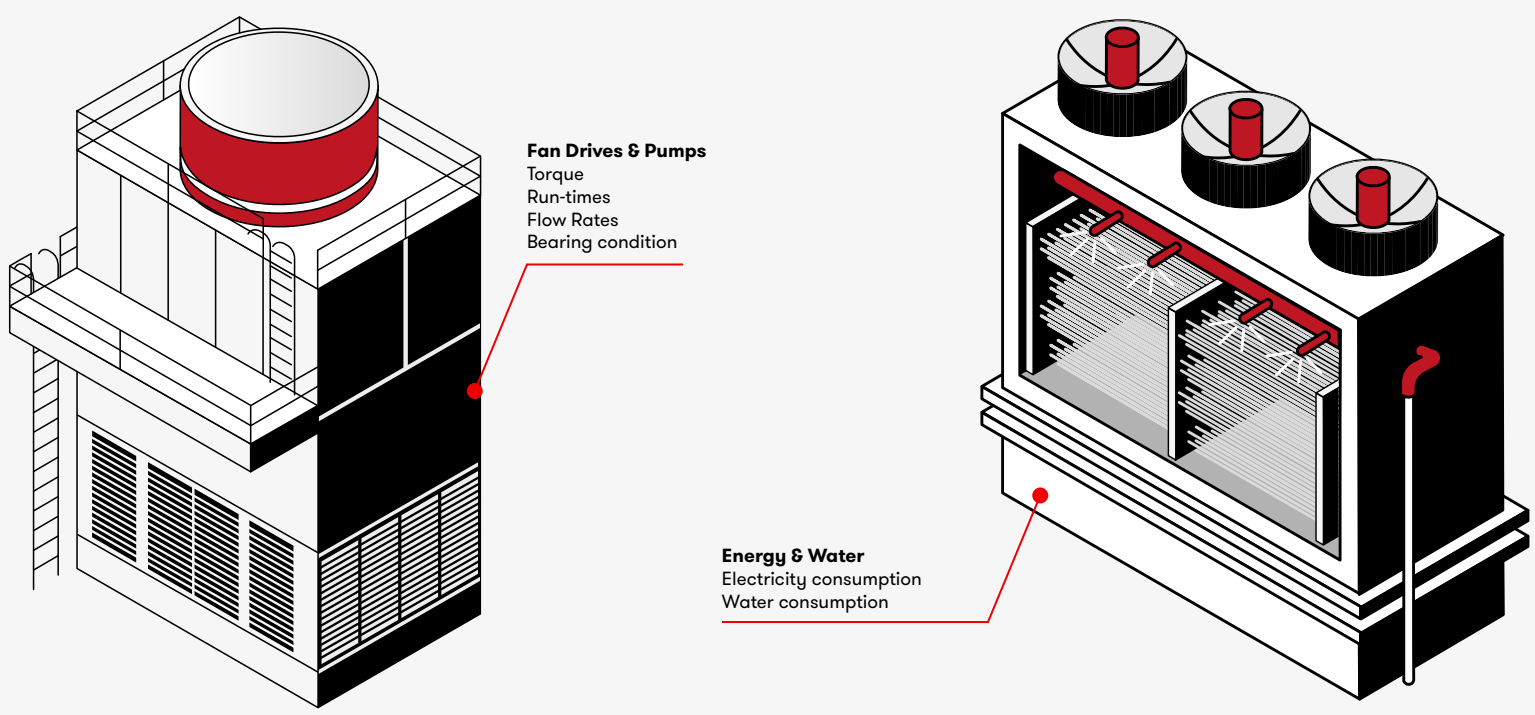

The Challenges.

Energy

The biggest impact that performance degradation of a cooling tower or evaporative condenser has is on energy consumption, as a reduction in the efficiency of these systems will directly impact the efficiency of the system they are cooling, typically

Operations

The major operational risk is around controlling the growth of bacteria related to Legionnaires Disease. Conformance to the control procedures specified in the HSE ACoP L8 aim to inhibit the growth of this potentially dangerous bacterium, and are a legal

Maintenance

The nature of the wet, exposed environment that the fans and pumps in a cooling tower operate in can lead to both mechanical and electrical faults on the motors, whilst the remote location of the assets makes them harder to monitor through traditional time-air or refrigeration compressors.

requirement, strictly enforced by the HSE. Control is usually managed through water temperature control and the addition of biocide to the tank. Whilst biocide dosing systems are automatically controlled to ensure a minimum level of biocide, overdosing of chemicals can often be missed, increasing the cost of operating these assets. In addition, increased water consumption can indicate damage to the pack and the drift eliminators.

based preventative methods.

Our Solutions.

Energy

Continuous monitoring of the inlet and outlet temperatures, wet bulb temperature and make-up water consumption will provide early warning of any drop in efficiency. Temperature probes can be fitted to measure the hot water, cold water and wet bulb temperatures. Current monitoring can be fitted to measure energy consumption in the pumps and fans. Any reduction in the efficiency will indicate fouling of the tower pack, requiring cleaning.

Operations

Extracting data from the chemical dosing system allows you to track chemical usage, indicating where overdosing may be occurring.

Maintenance

The nature of the wet, exposed environment that the fans and pumps operate in means that techniques such as vibration analysis are not usually suitable for this type of asset. Using current consumption as a leading indicator of failure is a cost-effective method of condition-monitoring a cooling tower.

This can be achieved through either collecting data direct from inverters if fitted, or more typically, CT clamps on the supply. The same current monitoring used to monitor efficiency and energy consumption can also be used to provide early warning of potential electrical or mechanical failure of the rotating assets.

Your Benefits.

Typical Cost Savings

Better operating insight means better management of processes and their assets, resulting in lower operating costs. Here are some examples, based on our real-world experience in production environments. The annual monitoring cost is only included in the Energy example, as the monitoring costs for both operational and maintenance monitoring would be included in that core plan.

Energy

Degradation in the heat transfer efficiency of the cooling tower will directly impact energy consumption of the heat source. Due to the wide range of potential loads on a cooling tower, you cannot quote a typical saving.

Operations

Monitoring chemical use can identify overdosing, reducing the cost of biocides.

Maintenance

Due to the wide variation of cooling tower and evaporative condenser types and deployments, indicative estimates of maintenance cost savings are difficult to create. Speak to our consultants for an indication based on your specific installation and operation.

Modular Framework.

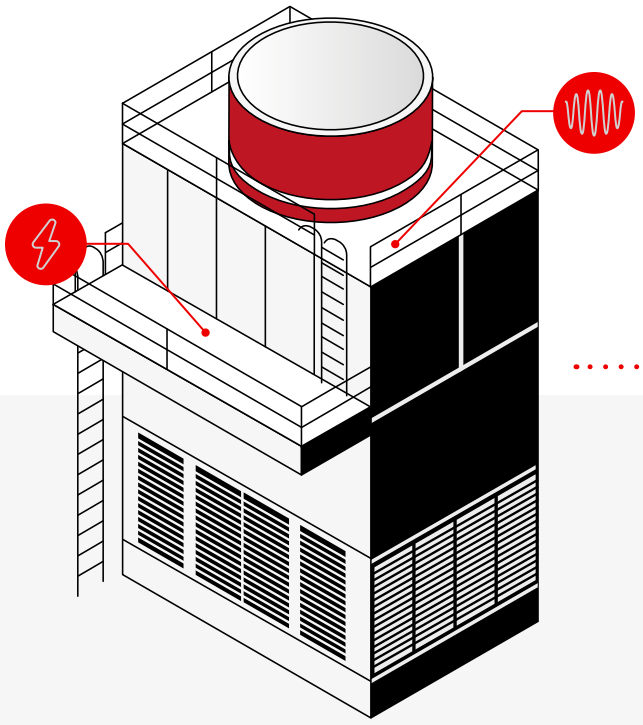

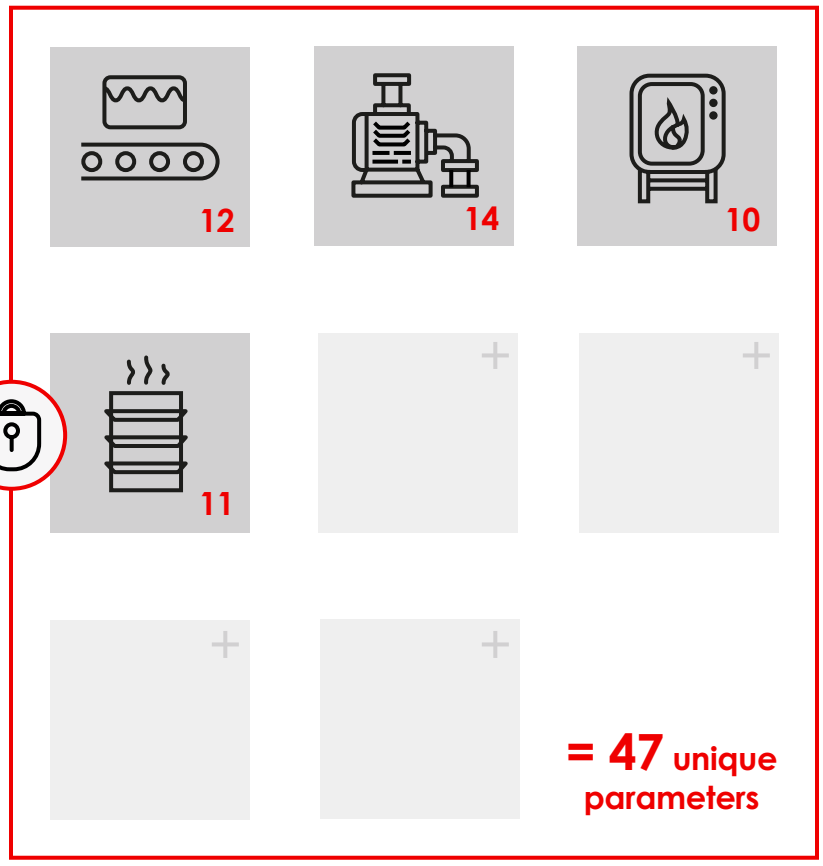

Start Simple, Grow Smart.

11 parameters

Modular and Secure

RS Industria is a modular system, providing an advanced, robust and cyber-secure framework into which any number of assets can be connected. This cloud-based system provides the following;

- **Asset Dashboards** – Designed for the specific asset type being monitored
- **Functional Dashboards** – Displaying Energy, Utilities, Compliance or Uptime for multiple assets, individual production lines or site-wide – all in one place.
- **Rules & Alerts** – Notifications and Warnings sent by SMS or email – or to the mobile app
- **Mobile App** – Real-time data display and alerts - Putting the data in the hands of those who need it, where they need it, when they need it.

Multi-Purpose Data.

Data Integration

As RS Industria integrates data from multiple sources, the system can re-purpose and combine data to extend the scope for asset insight.

Data Options

	Energy	Operations	Maintenance
Voltage	✓		✓
Current	✓	✓	✓
Torque	✓	✓	✓
Fault/Operating Modes		✓	✓
Runtime		✓	✓
Temperatures		✓	✓
Inlet		✓	✓
Outlet			✓
Wet Bulb			
Water Chemistry			✓
pH			
Water Hardness			
Oil Condition - sensor based			✓
Primary Paramaters	**3**	**5**	**3**
Re-purposed Parameters	**0**	**2**	**8**

Data Integration

As RS Industria integrates data from multiple sources, the system can re-purpose and combine data to extend the scope for asset insight.

For example, monitoring electrical drive voltages and current enables the system to calculate torque.

All three of these of these variables can be used to not only better understand the energy usage of an electrical drive, but also its physical condition and whether it is operating outside its normal parameters.

High current and torque might indicate a bearing problem, a conveyor belt sticking or a batch of ingredients with the wrong viscosity.

1. **Lubrication Failure Indicator** – this value uses specific frequencies to warn if a bearing is insufficiently lubricated, whether the lubricant is manually or automatically delivered.
2. **Bearing Damage Indicator** – Using frequencies from selected areas of the spectrum to rapidly identify when a bearing is being damaged, long before such damage is evident, or a failure occurs.

These indicators can be further enhanced by using the operating data to provide context such as variable loading.

Multi-Purpose data offers significant benefits over the use of dedicated single-purpose monitoring systems:

- **Single point of integrated data** – enables comparison between different variables, potentially offering greater insight
- **Context-sensitive alerts** – take account of normal operational variances to avoid false alarms

Gain Asset Insight Now

Find out how we can help lower energy usage, enhance reliability and improve operational performance: in a way that is simple, fast and affordable.

1

Book Requirements Review

Review your requirements with one of our consultants. We'll help you prepare for the next step in the process, which is a detailed discussion with one of our solution design engineers. To book a Requirements Review, **click this link.**

2

Browse Our website

To find out more details including:
- Real-world case studies
- Use-cases like this one
- Product videos

...and more. Visit our website to see what is possible with RS Industria.

https://www.rs-industria.com

3

Contact Us directly

+44 (0)333 2470235

rs-industriasupport@rs-components.com

Start Simple Grow Smart®